Instruction Leaflet

J.E.SUGDEN

A48 Amplifier

Series Two May 1976

INSTALLATION

Examine your amplifier to ensure that it is in a new state and that all the controls appear to operate mechanically in the correct manner. Confirm from the rating label underneath your amplifier that it is supplied at the correct mains voltage for your supply.

You should receive with your amplifier an owners registration card and a sealed polythene bag containing one set of four loudspeaker plugs, three DIN plugs and a plug to fit the mains outlet of your amplifier.

CONNECTIONS

i Mains

Approximately 10 feet (3 metres) of 3 core cable is supplied for connection to the mains supply. The colour coding of the mains lead is BROWN–LIVE; BLUE–NEUTRAL; GREEN/YELLOW–EARTH. A safety earth terminal is provided on the back panel adjacent to the mains input lead. This terminal may be used for the connection of an earth lead where it is inconvenient to use the green/yellow core of the mains lead. This terminal is NOT for the earthing of ancillary equipment. For certain markets a two core mains cable is fitted, coded BROWN or BLACK–LIVE and BLUE–NEUTRAL. It is possible to alter the internal connections of your amplifier to operate on other mains voltages–if this is necessary the work must be only entrusted to a qualified engineer. An auxiliary mains output socket is provided for connecting to ancillary equipment such as a turntable or self-powered radio tuner. The total load on this outlet should not exceed 250 Watts. Viewing from the underside of the amplifier, the mains fuse (1 amp slow blow) is located on the mains transformer panel and the two LT fuses (2.0 amp) are mounted on the power amplifier printed circuit panels.

ii Loudspeakers

Loudspeaker connections are made via the red and black 4mm sockets provided on the rear panel. Mains twin flex of about 5 amp rating colour coded for ease of phasing is recommended for the connecting wire. The amplifier produces its full rated output into loudspeakers of 8 or 4 ohms impedance. It will however, operate satisfactorily into loudspeakers of higher impedance but at reduced maximum output (approx. 30 watts into 15 ohms).

iii Headphones

A headphone socket is provided on the front panel of the amplifier.

iv Inputs

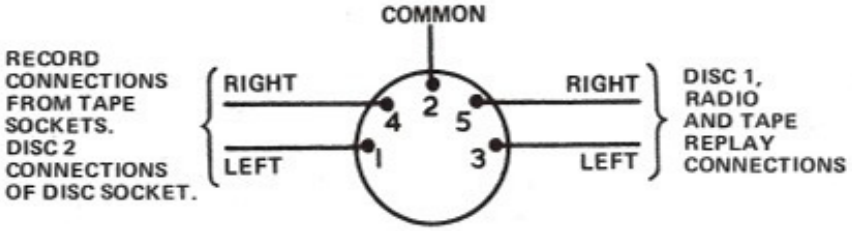

Four input sockets are provided for using 5 pin DIN plugs for DISC 1 and DISC 2, RADIO, TAPE 1 and TAPE 2 which should be wired according to DIN standards as shown, viewing from the inside of the plug, i.e. at the solder tag end. Please note that both DISC inputs are made to one socket.

Earthing of DISC inputs

It is important that the L.H. and R.H. screened leads from the pick-up cartridge, and the chassis lead (sometimes combined in the pick-up lead) should be connected ONLY to pin 2 of the DIN plug. Do NOT connect to the plug body, and care must be taken to insulate the screens from the plug body securing clip. If only one disc input is used, we recommend that this should be Disc 1 and that the unused pins in the DIN plug, i.e. 1 and 4 should be "earthed" or "grounded" by connecting them to Pin 2.

Adjustment of disc sensitivity

The sensitivity of the disc input has been carefully chosen to match most of the high quality cartridges currently available. There are a few cartridges which offer a much higher output, the use of which may necessitate a reduction of disc sensitivity–indicated by a need to operate the volume control at low settings, i.e. approaching 7.00 o'clock. Your dealer can do this for you. He should remove the pre-amplifier covers to reveal two pairs of pins on the print side of the printed circuit board at the input end. The pins are linked with thin tinned copper wire. If these wires are removed the resultant sensitivity will be 10mV instead of 2.5 or if they are replaced by 4.7K ohm resistors the sensitivity will be approximately 5mV. The overload capacity increases in the same proportion. This modification alters the sensitivity of both disc inputs.

OPERATION

Control facilities are provided by means of five rotary controls and thirteen push buttons on the front panel. The rotary controls offer the following facilities:

Input Selection–this is controlled by the extreme left hand large knob allowing five selections to be made–DISC 2, DISC 1, RADIO, TAPE 1 and TAPE 2.

Volume–Continuously variable controlled by the second large knob.

Bass, Treble and Balance–continuously variable controlled by the three smaller knobs. These three controls have central "click" positions giving "flat" response in the case of the tone controls and exactly equal outputs per channel in the case of the balance control.

TAPE

To play pre-recorded tape TAPE 1 or TAPE 2 should be selected by means of the rotary control. To record from programme sources: DISC 1, DISC 2 or RADIO, it is necessary to select the appropriate source on the rotary control. The selected input is automatically connected to BOTH tape output sockets. If the output from the monitoring circuit on the tape recorder is connected to the tape input of the amplifier A-B monitoring is possible by depressing the relevant TAPE button. When TAPE 1 is selected on the rotary control, this input is connected ONLY to TAPE 2 output socket. Similarly when TAPE 2 is selected this input is fed ONLY to TAPE 1 output socket. Thus it is possible to transfer from one tape machine (reel to reel or cassette) to another.

Tape Record Level: Connections to the Tape recorders should be made to their "LINE" or "AUX" inputs and outputs. This will normally require connecting cables with a DIN plug at one end and four phono plugs at the other. If it is required to use the "DIN" input–as for example with some European recorders which only have DIN inputs, it will be necessary to use an attenuator lead. A standard ex-factory available item is our "tape Attenuator Lead". This lead also permits connection to a monophonic recorder without the cross-connection "monoing" everything else.

In the event of a recorder with non-standard levels we are always pleased to assist in making up a special lead–do not hesitate to ask.

The push buttons which are of independent push on and push off operation are arranged in two groups of five and one group of three and offer facilities as follows:–

Left hand group—function.

Mute—silences the amplifier, without having to switch off or turn down the volume control, by "earthing" or "grounding" the input of the amplifier.

Tape 1 and Tape 2—offer monitoring facilities and A-B switching with three head tape recorders (see TAPE section).

Mono—mixes the left and right inputs and feeds them to both amplifiers.

Reverse—feeds left input to the right amplifier and right input to the left amplifier.

Central Group—filters and quiet control. The low frequency filter is selected by depressing the LF button and is useful for removing rumble, traffic and wind noise from the programme material. The turnover frequency is 70Hz and the rate of attenuation 18dB per octave. The high frequency filters are useful for removing distortion, hiss and surface noise from poor programme material and are selected by depressing one or both of the HF filter buttons. The rate of attenuation or slope is 6dB per octave and can be increased to 18dB per octave by depressing the steep button. The button marked 7KHz selects the 7KHz turnover frequency, the 10KHz button the 10KHz turnover frequency and both buttons together the 4KHz turnover frequency. The quiet button selects the quiet listening facility. Normal level should first be set on the volume control and the quiet button is depressed. The mid frequency level will then be attenuated 16dB but the lower frequencies to a less extent to cater for the equal subjective loudness effect of the ear. This facility is useful for applications such as background music.

Right hand group—

Mains — switches the amplifier on shown by lamp immediately above the switch lighting up.

L.S.1 — connects the amplifier outputs to loudspeaker pair one.

L.S.2 — connects the amplifier outputs to loudspeaker pair two.

DISMANTLING

If it is necessary to dismantle the amplifier—e.g. in order to gain access to the pre-amplifier board to adjust the disc sensitivity, it should be undertaken in the following order:-

1. Remove the two side panels, by unscrewing the two securing screws on each side with an Allen key—this will reveal the fixing screws for the top panel.
2. Remove the top panel by unscrewing the two fixing screws with a small "Posidriv" screwdriver. Care should be taken not to "snag" the front brushed aluminium trim on the protruding screw heads on the steel front panel.
3. Remove the base plate by unscrewing the four fixing screws with a large "Posidriv" screwdriver.
4. Remove the pre-amplifier covers by unscrewing the four screws holding each half section with a small electricians screwdriver.

On no account should this dismantling procedure be undertaken unless the amplifier is disconnected from the mains.

If through carelessness or inadvertance the DC fuses on the power amplifier panels are blown, access to them is gained by standing the amplifier on its heatsink at the rear and removing the base plate as explained in section three above.
Warning because the extremely large electrolytic capacitors in your amplifier hold their charge for some time, it is dangerous to replace a DC fuse immediately after it has blown. Either wait at least five minutes for the charge to leak away naturally or discharge all six capacitors with a resistor of approximate value 10 ohms, and the loudspeakers switched off.

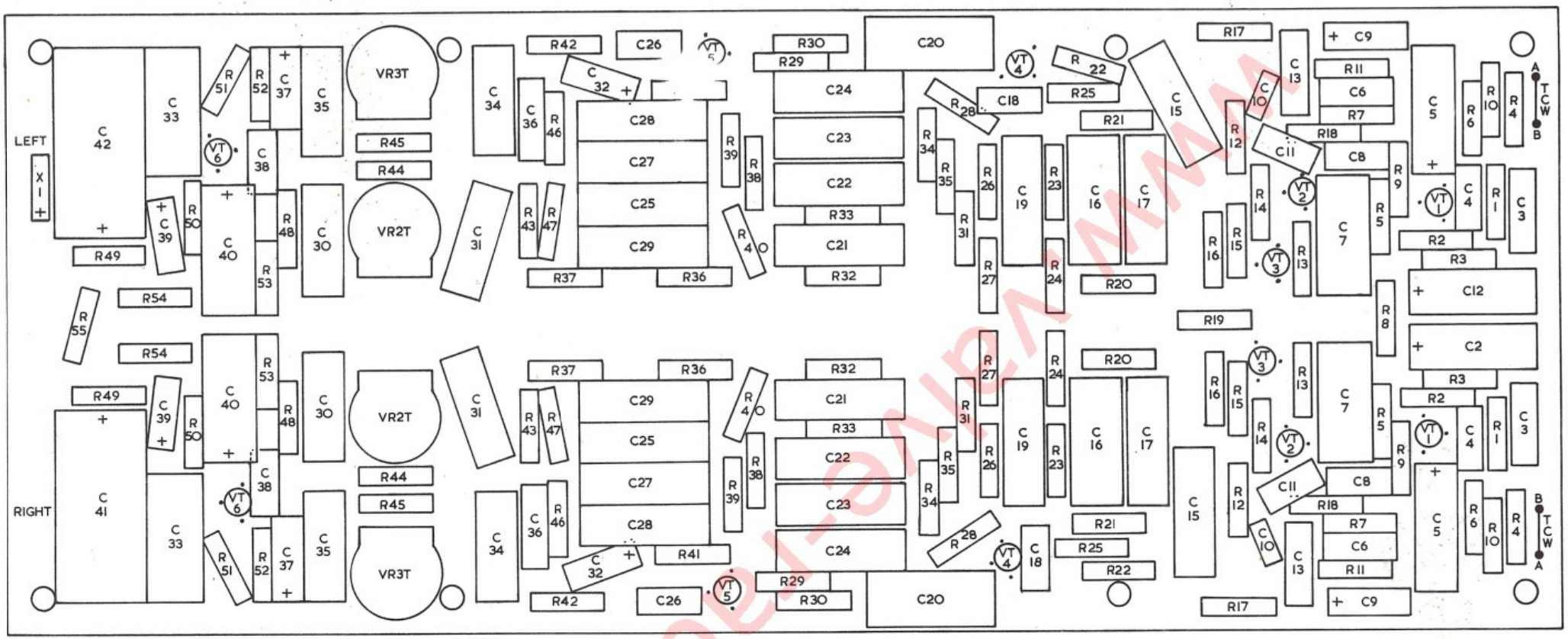

A48 PRE-AMPLIFIER

Pre-amplifier Component List

R 1	2K7	R15	15K	R29	10K	R43	1M	VR1	250K Log	C 8	47p	C22	1n5	C36	220n	X1	BZX 79-C27		
R 2	330K	R16	4K7	R30	1M	R44	18K	VR2	50K	C 9	10	C23	4n7	C37	2u2				
R 3	56K	R17	4K7	R31	1K2	R45	18K	VR2T	220K	C10	1n0	C24	3n3	C38	1n0				
R 4	2K2	R18	8M2	R32	8M2	R46	1K5	VR3	250K	C11	470p	C25	1n5	C39	2u2				
R 5	100K	R19	680	R33	8M2	R47	6K8	VR3T	1M	C12	100	C26	470p	C40	470				
R 6	8K2	R20	8M2	R34	8M2	R48	47K	VR4	50K	C13	220n	C27	2n2	C41	470				
R 7	22K	R21	100K	R35	8M2	R49	470K			C14	10n	C28	10n	C42	470				
R 8	2K2	R22	1M	R36	8M2	R50	68K	C 1	10n	C15	10n	C29	6n8						
R 9	2M2	R23	220K	R37	8M2	R51	1K	C 2	100	C16	100n	C30	10n	VT1	BC549CS				
R10	470K	R24	220K	R38	4K7	R52	4K7	C 3	220n	C17	10n	C31	10n	VT2	BC549CS				
R11	1M	R25	1K2	R39	1K	R53	1K2	C 4	470p	C18	470p	C32	2u2	VT3	BC549CS				
R12	75K	R26	1K	R40	3K9	R54	4K7	C 5	100	C19	22n	C33	100n	VT4	BC549CS				
R13	10K	R27	4K7	R41	2K2	R55	220	C 6	3n6	C20	100n	C34	22n	VT5	BC549CS				
R14	39K	R28	10K	R42	10K			C 7	100n	C21	2n2	C35	22n	VT6	BC549CS				

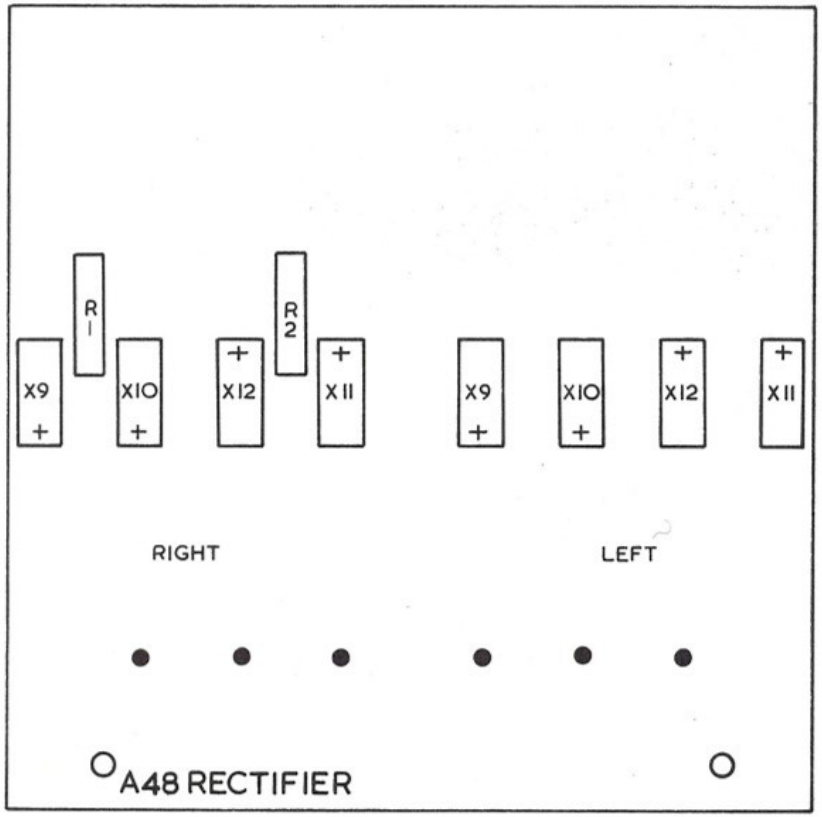

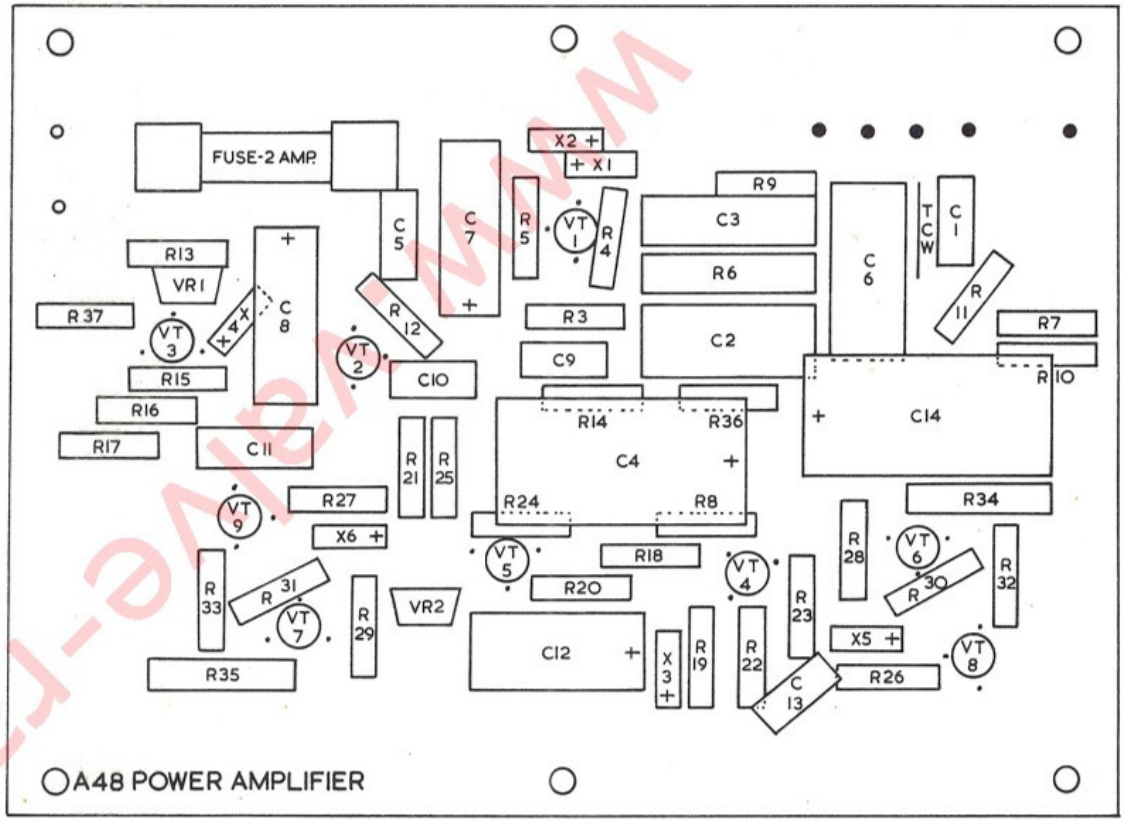

Main Amplifier Component List

R 1	5K6	R13	10K	R25	3K9	R37	10K	C 2	100n	C14	470	X 7	BY206	VT 6	BC548
R 2	5K6	R14	10K	R26	10	R38	10	C 3	2n2	C15	10,000	X 8	BY206	VT 7	BC558
R 3	2M2	R15	100	R27	10	R39	390	C 4	470	C16	10,000	X 9	1N5401	VT 8	BD529 or BCX31
R 4	470K	R16	220K	R28	1K5	R40	390	C 5	1n0	C17	10,000	X10	1N5401	VT 9	BD520 or BCX35
R 5	6K8	R17	8M2	R29	1K5	R41	100	C 6	100n	C18	220n	X11	1N5401	VT10	2N3055 or BDX93
R 6	1K5	R18	1K2	R30	2K7	R42	1.0	C 7	100			X12	1N5401	VT11	MJ2955 or BDX94
R 7	8K2	R19	1K2	R31	2K7	RX	27K–220K	C 8	100	X 1	1N4148				
R 8	4K7	R20	4K7	R32	100			C 9	470p	X 2	1N4148	VT 1	BC549CS		
R 9	47	R21	3K9	R33	100	VR1	220K	C10	270p	X 3	OA202	VT 2	ZTX341		
R10	8K2	R22	1K2	R34	0.33	VR2	4K7	C11	220n	X 4	OA202	VT 3	ZTX541		
R11	2K2	R23	1K8	R35	0.33			C12	470	X 5	1N4148	VT 4	BC548		
R12	220K	R24	330	R36	10	C 1	270p	C13	47p	X 6	1N4148	VT 5	BC548		

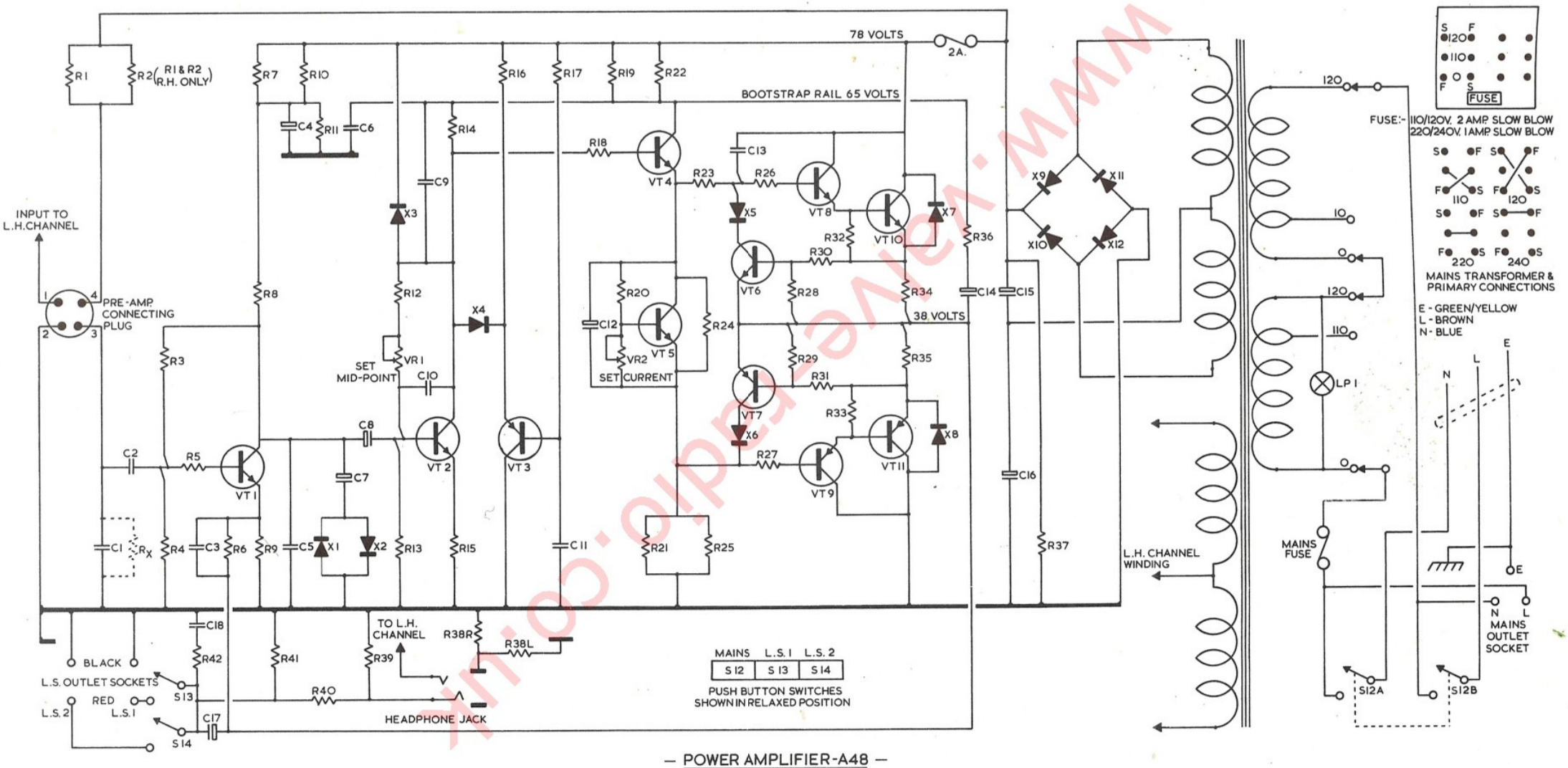

— POWER AMPLIFIER-A48 —

(R.H. CHANNEL SHOWN IN DETAIL)

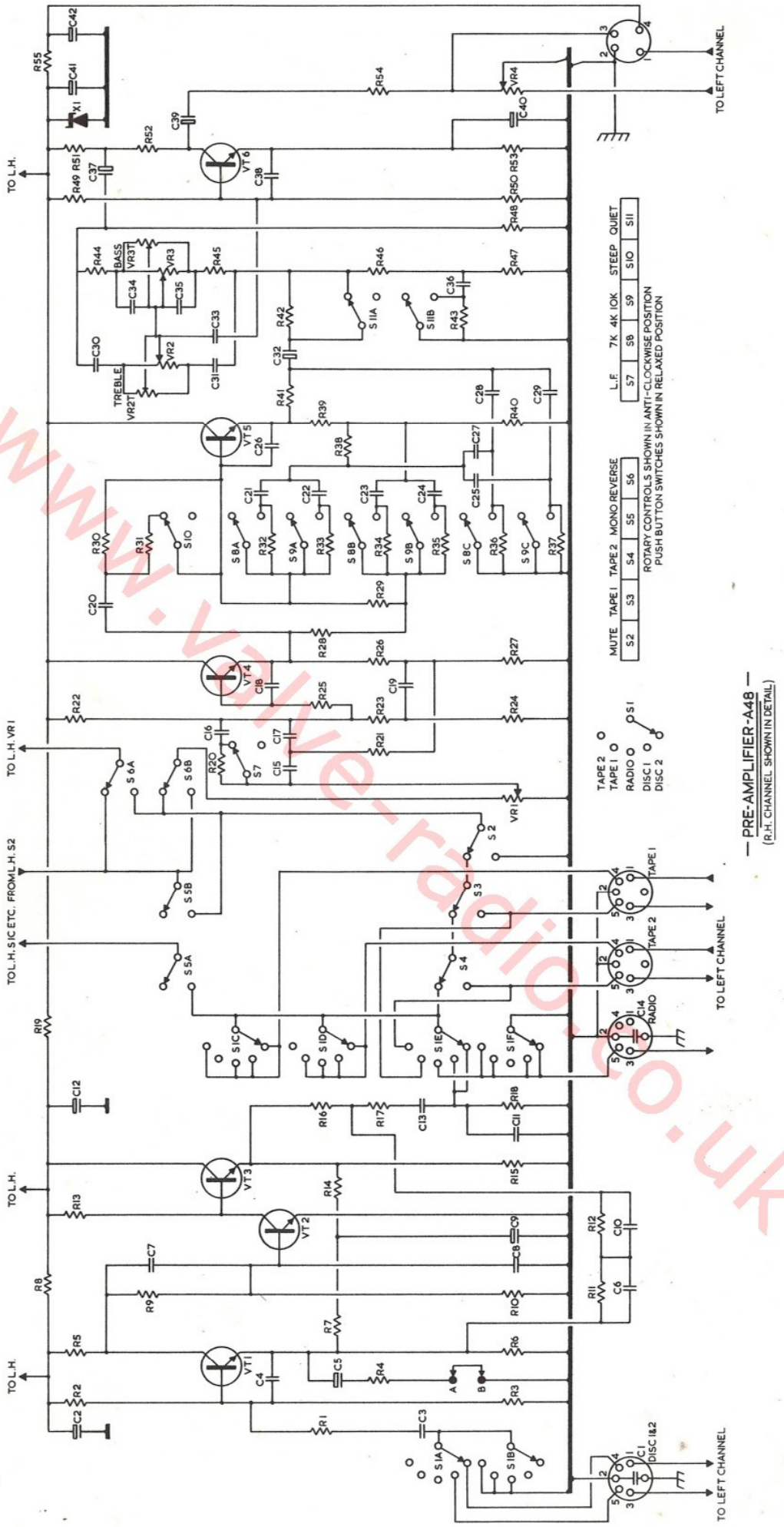

The right is reserved to change the specification or design without notice.

J. E. Sugden & Co. Ltd., Carr Street, Cleckheaton, West Yorkshire.